DWG.NO

REV.NO	REVISION RECORD	DATE	CK
1			

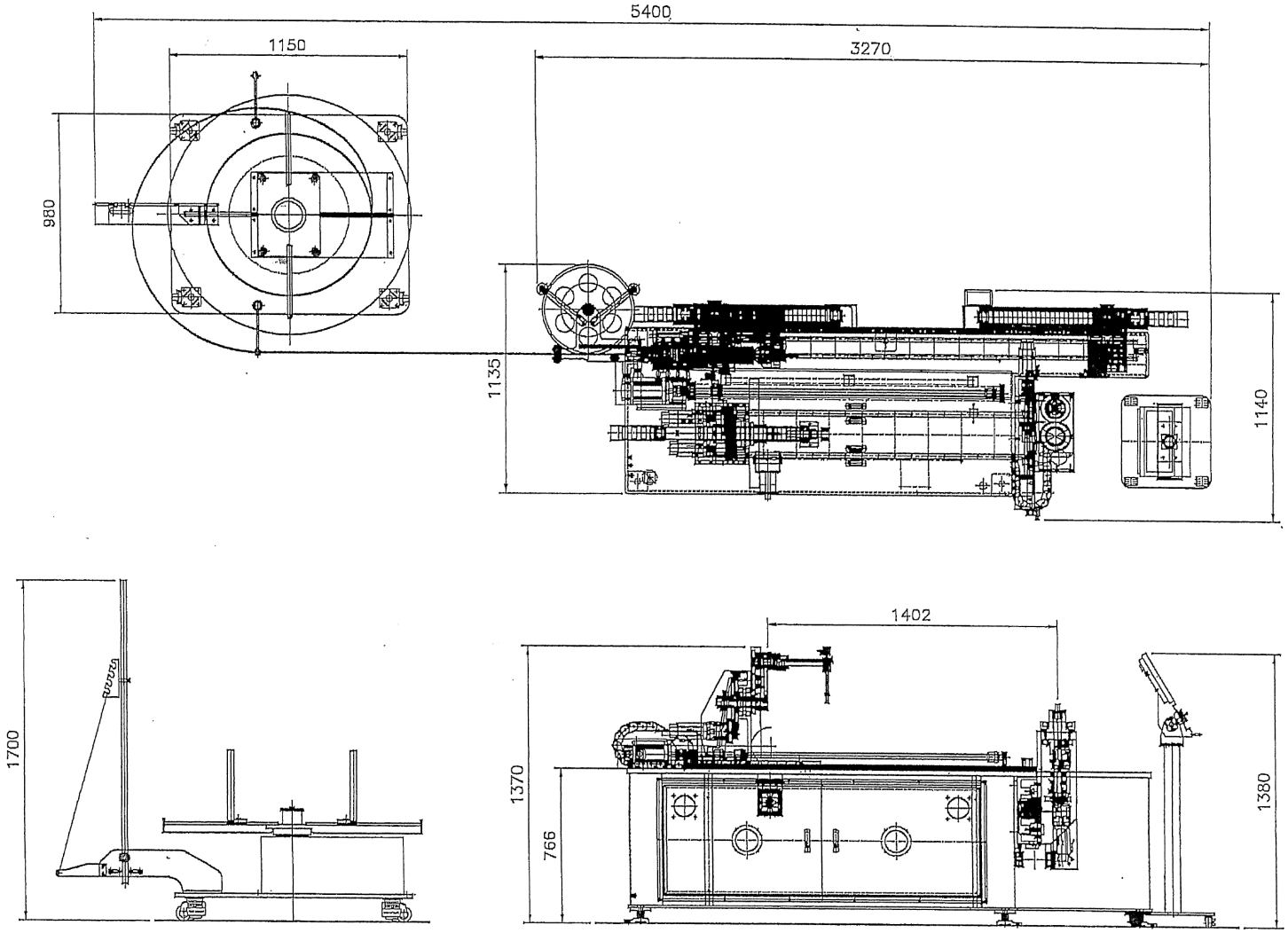

1.0t 自動線台

重量300Kg

本体重量　1,250Kg

NO.	PART NAME	MATERIAL	QUANTITY	WEIGHT	REMARK
WIRE BENDING MACHINE-3D-ORYO(C1400)					
LAYOUT					

DRAW	
DESIGNED	
CHECKED	
APPROVED	
DATE	
DWG NO.	
REF NO.	

SCALE 1/30

A4

NICE